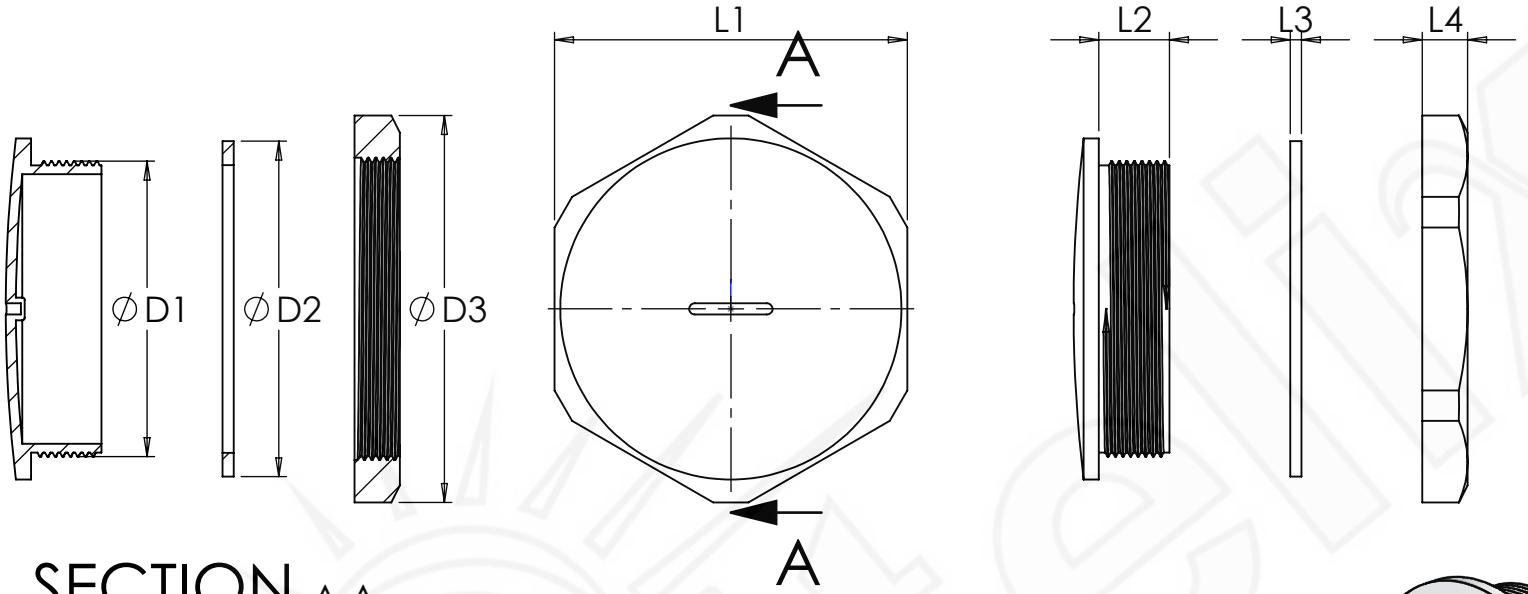


SECTION A-A

SCALE 1 : 1.5

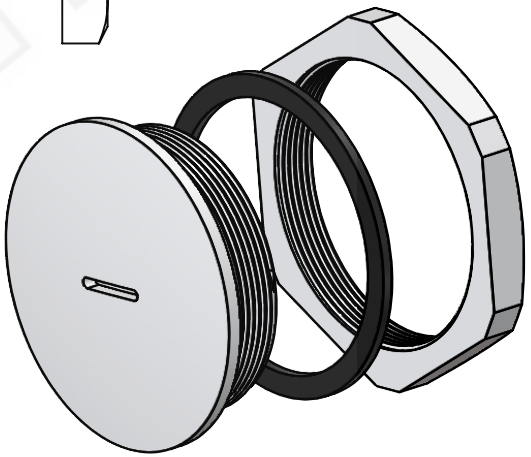

# GLAND PLUG SPECS (mm)

| PG/NPT | PART NUMBER | | D1 | D2 | D3 | L1 | L2 | L3 | L4 |
|---|---|---|---|---|---|---|---|---|---|
| PG7 | HP07P | | 12.1 | 16.0 | 19.8 | 18.0 | 8.4 | 1.0 | 4.6 |
| PG9 | HP09P | | 14.7 | 19.9 | 23.9 | 22.0 | 8.5 | 1.0 | 4.7 |
| PG11 | HP11P | | 18.2 | 23.5 | 26.0 | 24.0 | 8.9 | 1.0 | 5.0 |
| pg13.5 | HP13P | | 20.0 | 24.9 | 29.1 | 27.0 | 8.8 | 1.0 | 5.1 |
| PG16 | H16P | | 22.0 | 27.5 | 32.9 | 30.0 | 10.2 | 1.5 | 5.2 |
| PG19 | HP19P | | 23.5 | 29.2 | 32.8 | 30.0 | 11.1 | 1.5 | 5.5 |
| PG21 | HP21P | | 27.7 | 35.4 | 38.3 | 35.0 | 10.2 | 1.5 | 6.0 |
| PG25 | HP25P | | 29.7 | 37.6 | 40.2 | 37.0 | 10.2 | 1.5 | 5.8 |
| PG29 | HP29P | | 36.6 | 43.7 | 49.4 | 45.0 | 10.6 | 1.5 | 6.8 |
| PG36 | HP36P | | 46.3 | 54.5 | 62.0 | 56.0 | 13.5 | 1.5 | 7.8 |
| PG42 | HP42P | | 53.9 | 62.6 | 71.9 | 42.0 | 13.5 | 1.5 | 8.4 |
| PG48 | HP48P | | 58.7 | 67.2 | 77.9 | 70.0 | 14.0 | 2.0 | 9.0 |
| 1/2" NPT | HP-N050 | | 20.9 | 26.7 | 29.5 | 27.0 | 9.9 | 1.7 | 6.4 |
| 3/4" NPT | HP-N075 | | 25.8 | 30.0 | 36.3 | 33.0 | 11.4 | 1.7 | 7.1 |
| 1" NPT | HP-N100 | | 37.8 | 39.9 | 46.4 | 41.0 | 11.0 | 1.7 | 7.8 |

THE INFORMATION CONTAINED IN THIS DRAWING IS THE SOLE PROPERTY OF ALTELIX LLC. ANY REPRODUCTION IN PART OR WHOLE WITHOUT THE WRITTEN PERMISSION OF ALTELIX LLC IS PROHIBITED. ALL SPECIFICATIONS SUBJECT TO CHANGE WIHTOUT NOTICE. (C) 2026 ALTELIX LLC.

Altelix
www.altelix.com
1201 Clint Moore Road
Boca Raton, FL 33487
TEL: 561-660-9434

DESCRIPTION

HP Series Gland Plug Specs

PART NO.

FILE NAME DRW-HPXXX

SCALE: NONE | REV: A | SHEET 1 OF 1