REV	DATE	DESCRIPTION
A	04/25/23	INITIAL RELEASE

THE INFORMATION CONTAINED IN THIS DRAWING IS THE SOLE PROPERTY OF ALTELIX LLC. ANY REPRODUCTION IN PART OR WHOLE WITHOUT THE WRITTEN PERMISSION OF ALTELIX LLC IS PROHIBITED. (C) 2018 ALTELIX LLC.

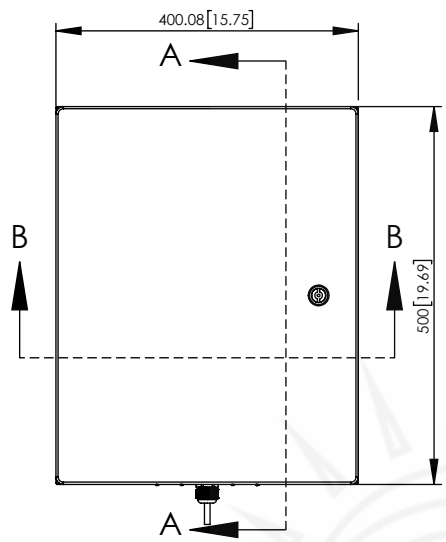

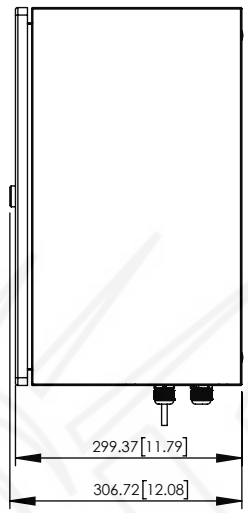

SECTION A-A

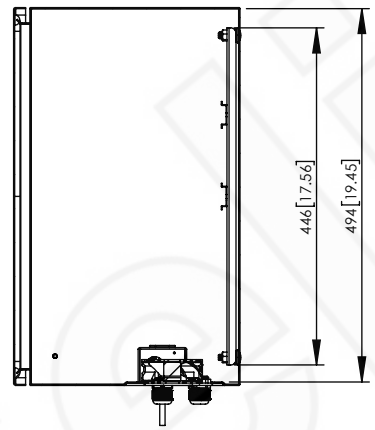

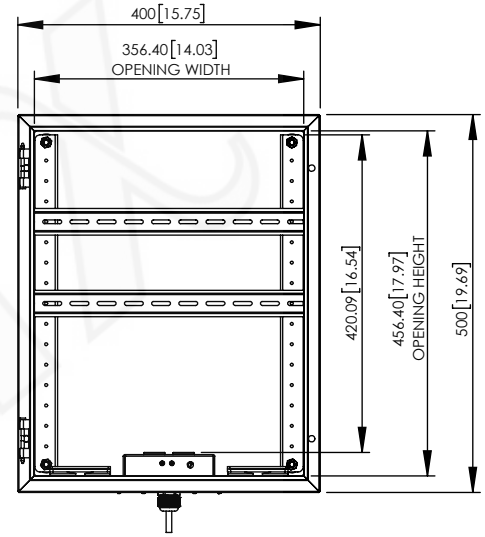

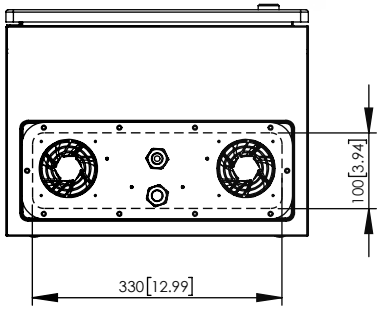

SECTION B-B

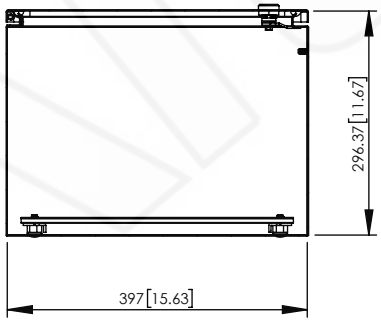

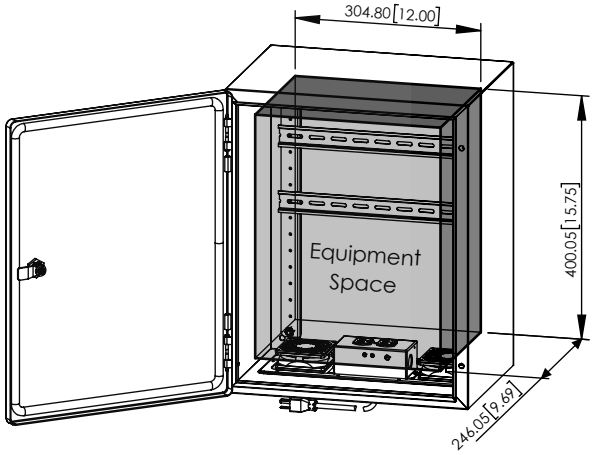

NO.	DESCRIPTION	MATERIAL	FINISH	QTY.
8	-	-	-	-
7	-	-	-	-
6	-	-	-	-
5	-	-	-	-
4	-	-	-	-
3	-	-	-	-
2	-	-	-	-
1	NEMA Enclosure	Stainless Steel	-	1

UNLESS OTHERWISE SPECIFIED:
DIMENSIONS ARE IN MILLIMETERS.
DIMENSIONS IN [ ] ARE IN INCHES AND ARE FOR CUSTOMER REFERENCE ONLY.

TOLERANCES FOR MILLIMETERS:
0.5-8mm ± 0.20mm
8-30mm ± 0.40mm
30-120mm ± 0.50mm

TASK	NAME	DATE
DRAWN BY	C.CADENAS	04/25/23
CHECKED	-	-
APPROVED	-	-

Altelix
www.altelix.com
1201 Clint Moore Road
Boca Raton, FL 33487
TEL: 561-660-WIFI

PART DESCRIPTION
20 X 16 X 12 STAINLESS STEEL NEMA ENCLOSURE

PART NUMBER NX201612VFA1C-DIN
DRAWING NUMBER DRW-NX201612VFA1C-DIN
SCALE: 1:10 REV: A SHEET 1 OF 1