REV	DATE	DESCRIPTION
A	02/27/17	INITIAL RELEASE
B	06/09/17	UPDATED DESIGN

THE INFORMATION CONTAINED IN THIS DRAWING IS THE SOLE PROPERTY OF ALTELIX LLC. ANY REPRODUCTION IN PART OR WHOLE WITHOUT THE WRITTEN PERMISSION OF ALTELIX LLC IS PROHIBITED. ALL SPECIFICATIONS SUBJECT TO CHANGE WIHTOUT NOTICE. (C) 2017 ALTELIX LLC.

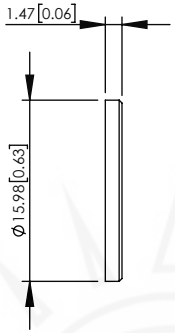

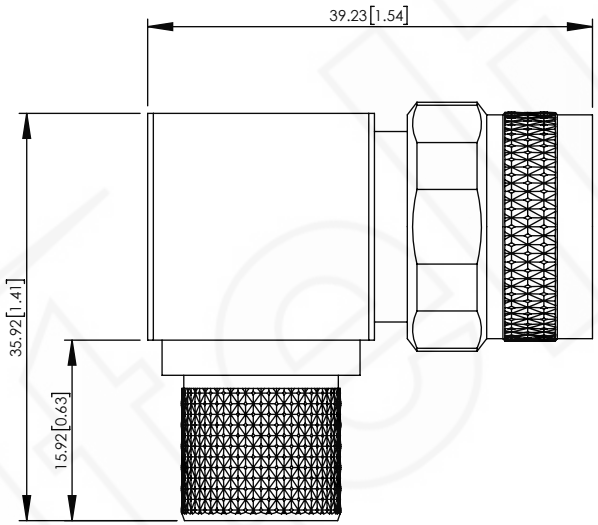

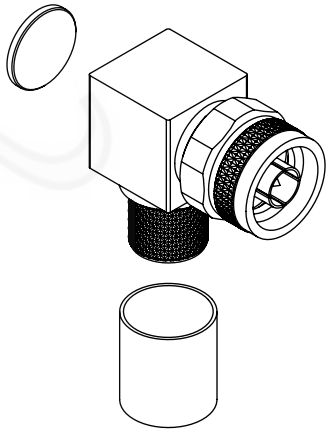

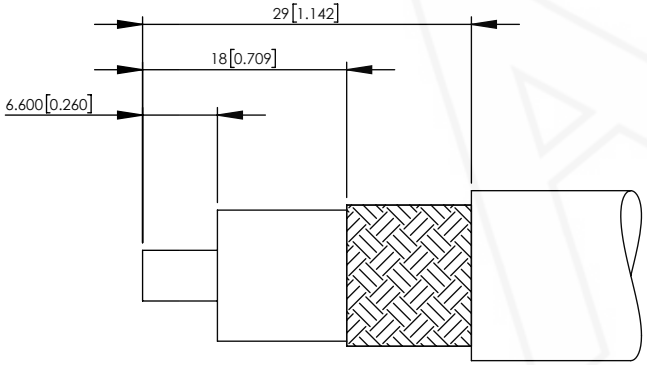

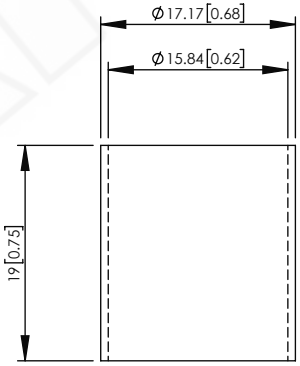

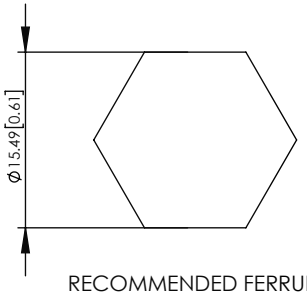

RECOMMENDED FERRULE CRIMP SIZE

NO.	DESCRIPTION	MATERIAL	FINISH	QTY.
8	-	-	-	-
7	-	-	-	-
6	-	-	-	-
5	COVER	BRASS	NICKEL	1
4	FERRULE	BRASS	NICKEL	1
3	CONTACT PIN	BRASS	GOLD	1
2	DIELECTRIC	PTFE	-	1
1	BODY	BRASS	NICKEL	1

UNLESS OTHERWISE SPECIFIED:
DIMENSIONS ARE IN MILLIMETERS.
DIMENSIONS IN [ ] ARE IN INCHES AND ARE FOR CUSTOMER REFERENCE ONLY.

TOLERANCES FOR MILLIMETERS:
0.5-8mm ± 0.20mm
8-30mm ± 0.40mm
30-120mm ± 0.50mm

TASK	NAME	DATE
DRAWN BY	N. COLUCCI	02/15/17
CHECKED	-	-
APPROVED	-	-

Altelix
www.altelix.com
1201 Clint Moore Road
Boca Raton, FL 33487
TEL: 561-660-WIFI

PART DESCRIPTION
N-MALE R/A CRIMPCONNECTOR
600 SERIES

PART NUMBER CC600CNM-1
DRAWING NUMBER DRW-CC600CNM-1
SCALE: 2:1 REV: B SHEET 1 OF 1