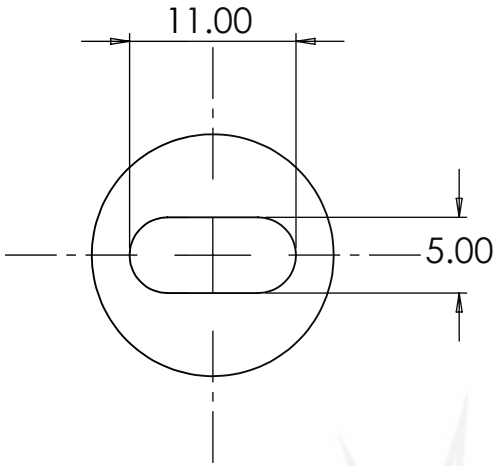

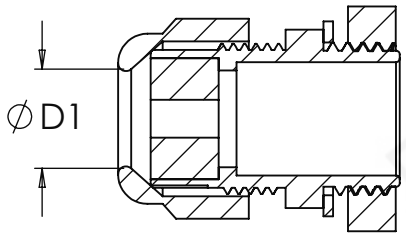

SECTION A-A

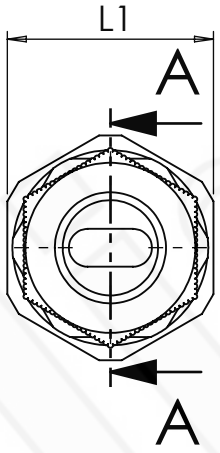

MATERIAL SPECS
CE RoHS

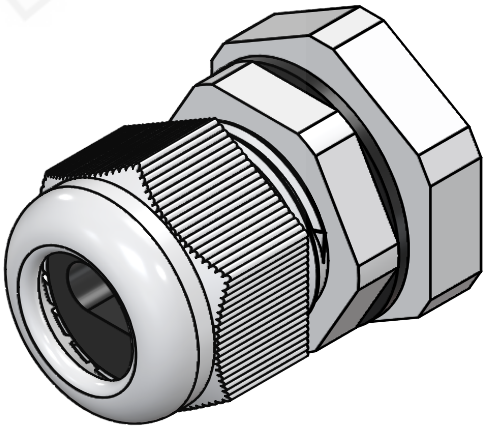

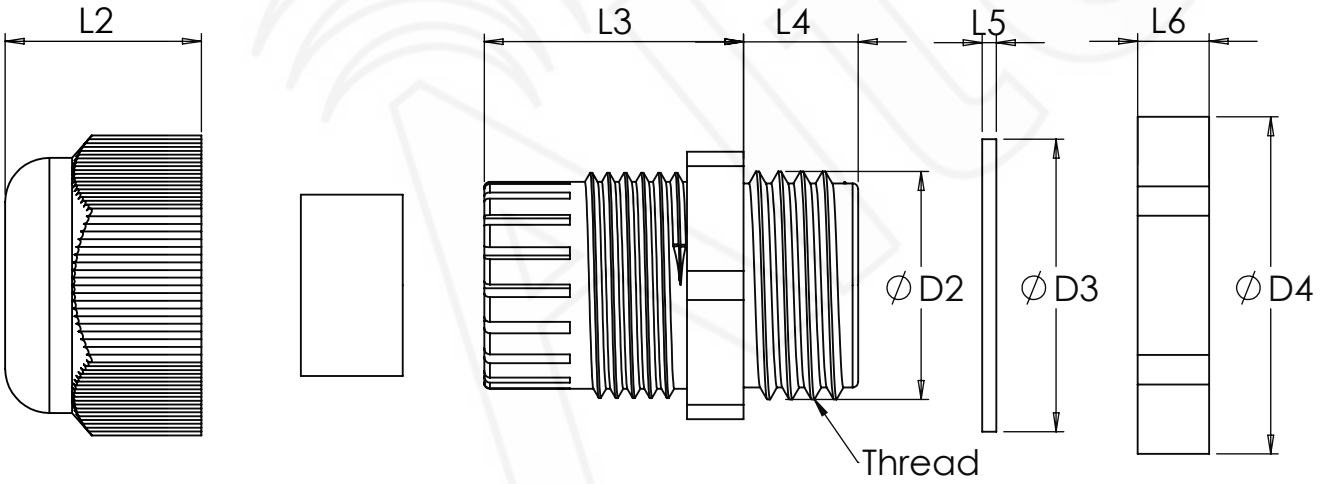

THE INFORMATION CONTAINED IN THIS DRAWING IS THE SOLE PROPERTY OF ALTELIX LLC. ANY REPRODUCTION IN PART OR WHOLE WITHOUT THE WRITTEN PERMISSION OF ALTELIX LLC IS PROHIBITED. ALL SPECIFICATIONS SUBJECT TO CHANGE WIHTOUT NOTICE. (C) 2026 ALTELIX LLC.

ROMEX GLAND SPECS (mm)

THREAD	PART NUMBER	COLOR		D1	D2	D3	D4	L1	L2	L3	L4	L5	L6
PG16	HG16-RMX	GRAY		14.0	22.3	27.5	33.0	30.0	21.5	24.1	10.0	1.5	5.2
NPT 1/2"	HG-N50-RMX	GRAY		12.5	20.5	25.8	30.0	27.0	17.0	22.8	10.1	1.2	6.3

Altelix
www.altelix.com
1201 Clint Moore Road
Boca Raton, FL 33487
TEL: 561-660-9434
support@altelix.com

DESCRIPTION
Romex Gland Specs

PART NO.

FILE NAME DRW-HG-RMX

SCALE: NONE | REV: A | SHEET 1 OF 1