Adjustable Rack-Mount DIN Rail Kit

NHBS-RACK-DIN

Installation Manual

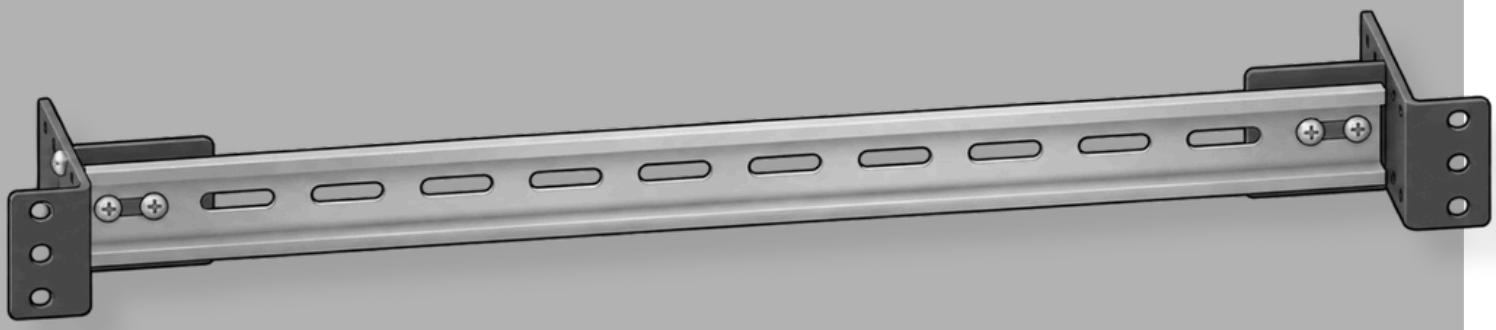

Product Description

Mount 35 mm DIN-rail equipment in a standard 19-inch rack. Choose from five mounting depths.

⚠ CAUTION

Read this manual before installation and use.

Altelix.com
Support@altelix.com

How To Install The Rack Mount DIN Rail Kit

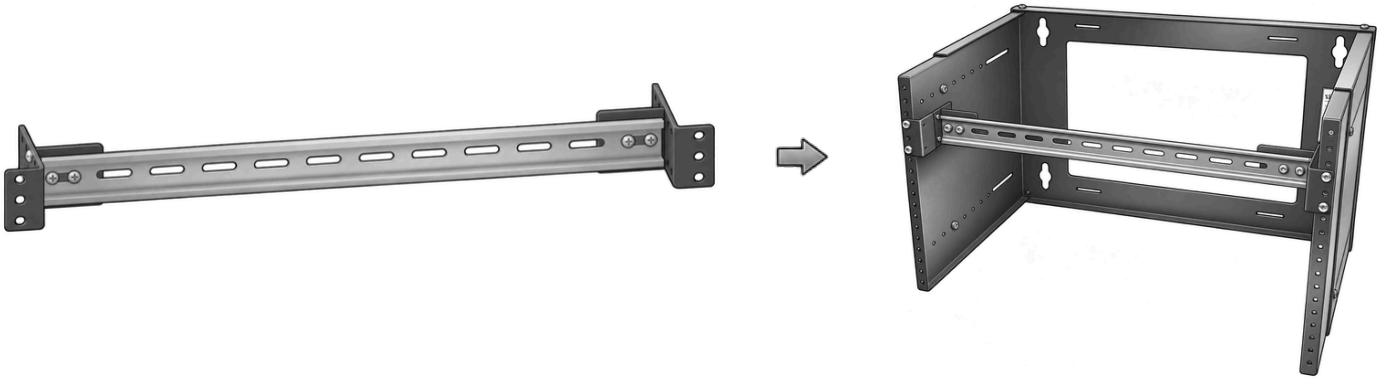

1- Choose the rail facing.

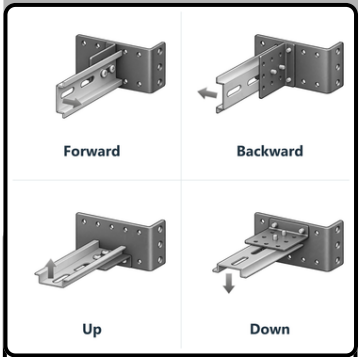

Face the rail forward, backward, up, or down to suit your equipment.

2- Choose the rack ear orientation.

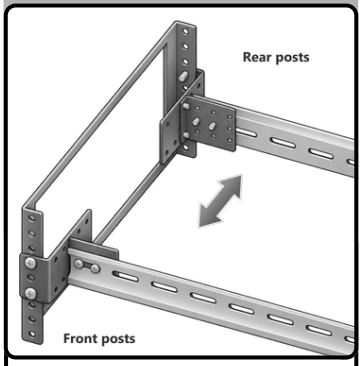

On the front or rear posts, orient the ears to leave room for equipment and cables.

3- Choose the rail depth.

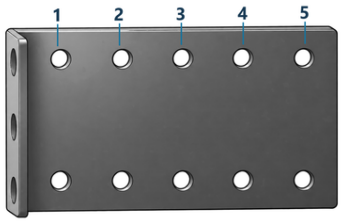

Use the same one of the five positions on both ears.

4- Attach the supports.

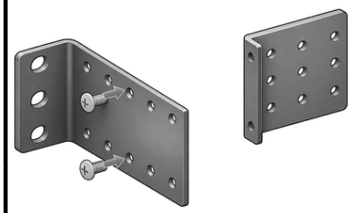

Fit one support inside each ear and tighten both side screws.

5- Fasten the DIN rail.

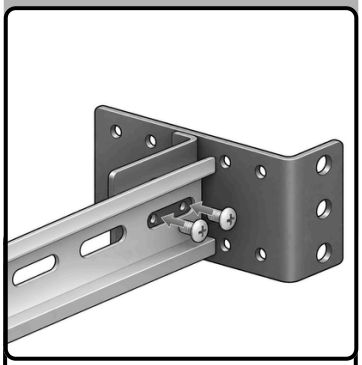

Face the raised edges toward the equipment. Tighten two screws through each end slot.

6- Mount the assembly.

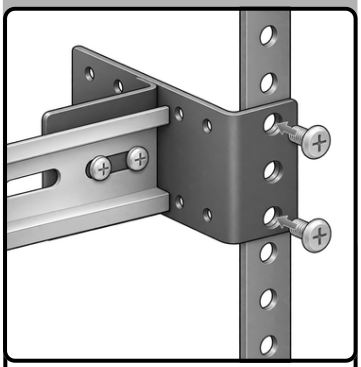

Align both ears at the same 1U height. Secure each ear through its top and bottom holes with rack screws.

7- Ready for equipment.



Clip your compatible 35 mm DIN-rail equipment onto the rail.

Altelix.com
Support@altelix.com