Altelix
Think Inside The Box

NP17-MAR1

Installation Manual



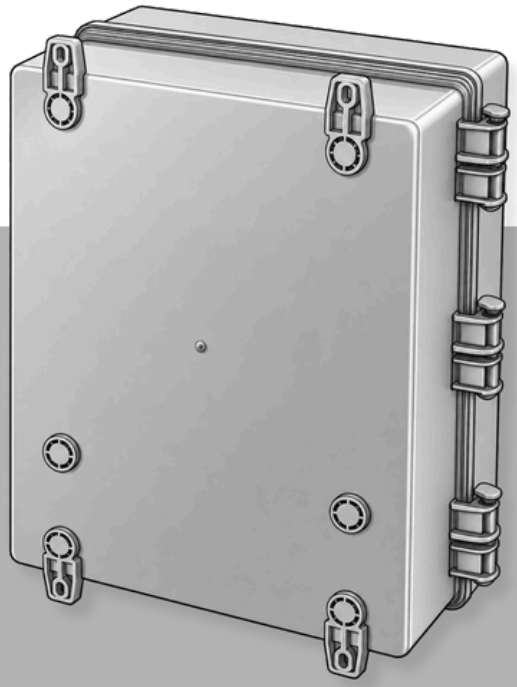

Configurations Covered

NP17-MAR1
NP17B-MAR1
NP17H-MAR1
NP17BH-MAR1

⚠ CAUTION

Read this manual before installation and use.

Altelix.com
Support@altelix.com

BEFORE YOU INSTALL

WARNING — POWER LINES

- **Installation near power lines is dangerous. Follow the installation directions.**
- **Keep the enclosure away from overhead wires. If it approaches overhead wires, immediately let go, stay away, and call the utility company.**

Before starting

- ■ Never work alone. Keep someone nearby who can call for help.
- ■ Check the weather and footing. Avoid slippery conditions, rain, and thunderstorms.
- ■ Use a non-conductive (non-metallic) ladder.
- ■ Secure the enclosure to a structurally adequate support for weight, wind, and ice loads.

Choose safe location

- Inspect the site and anticipate hazards before beginning.
- Select a safe installation location.
- If power lines are nearby, contact your local electric utility for assistance.

TRAINED PROFESSIONAL INSTALLER ONLY

WARNING: Rooftop Installation Hazards

- **No Ground Isolation:** Being on a roof does not isolate you from the ground. You can still be severely electrocuted, shocked, or killed. A minor shock can cause a dangerous or fatal fall.
- **Overhead Line Clearance:** Maintain a minimum distance of **10 feet** between yourself, tools, or ladders and all overhead power lines or service drops.
- **Fall Protection:** Use an approved safety harness and tie-off system when working near roof edges or on steep slopes. Do not work on roofs during high winds, rain, or when surfaces are wet.
- **Tool Safety:** Ensure any power tools used on the roof are plugged into a **GFCI-protected outlet** at ground level. Never carry heavy equipment up a ladder; use a hoisting rope.

Electrical Safety Warning for Outdoor Installation:

- Plug this device only into a **GFCI-protected** outdoor-rated outlet.
- Ensure the outlet has a **weatherproof "in-use" (bubble) cover** rated for wet locations.
- All wiring, conduits, and grounding must strictly comply with the **National Electrical Code (NEC)** and local building codes.
- Non-metallic (plastic) enclosures require a dedicated internal ground wire; plastic does not bond conduit connections.
- Keep the enclosure securely closed and locked or latched when energized to prevent electric shock or unauthorized access.

Electrical safety

- Ground the unit during installation. Follow the National Electrical Code (NEC) and local codes. Non-metallic enclosures do not provide grounding between conduit connections.
- Secure the enclosure when energized to prevent unauthorized access and electric shock.

Copyright (C) 2026 Altelix LLC. All rights reserved. Altelix and Think Inside the Box are Registered Trademarks of Altelix LLC.
Specifications are subject to change without notice. See www.altelix.com for most current information

Parts

CABLE MANAGEMENT STRAPS (4)

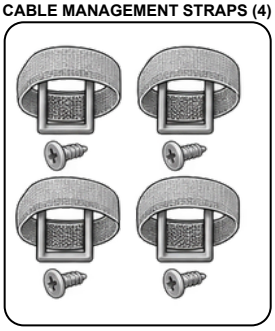

WALL ANCHORS (4)



1FT C7 POWER CABLE INCLUDED FOR INSTALLATION OF AMP

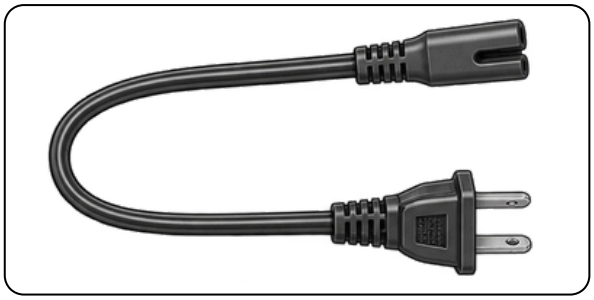

EXTRA DOOR LOCKING KEY
LOCKING KEY

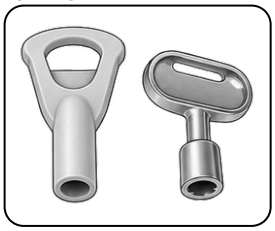

MULTI-PORT CABLE GLANDS
WITH PLUGS

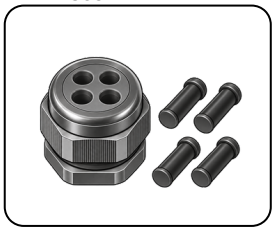

CABLE GROMMETS (12)

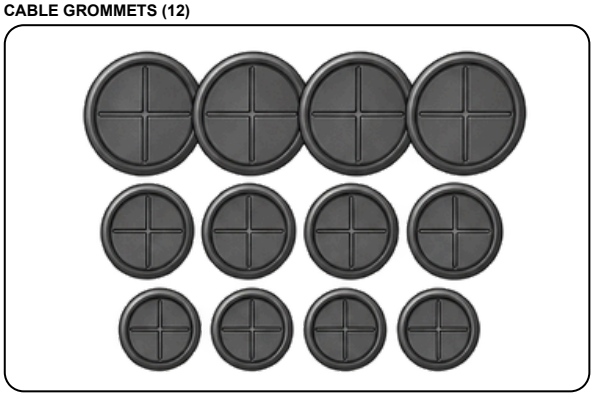

RUBBER SEALING WASHERS (4)



HOOK-N-LOOP TAPE (2)



CABLE GLANDS (8)

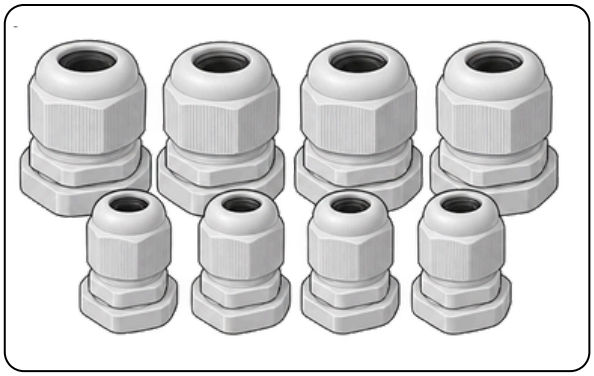

CABLE TIES (5)
CABLE MANAGEMENT BRACKET (1)

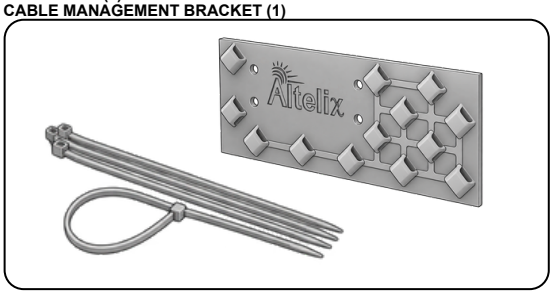

Included Pole Mount Kit

GALVANIZED STEEL MOUNTING BRACKETS (2)

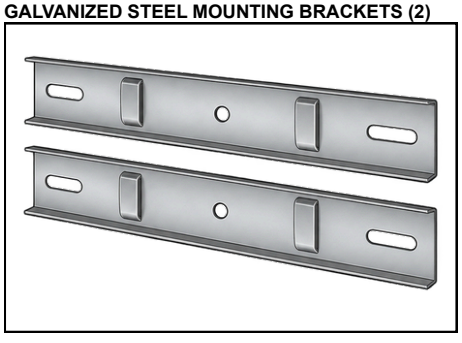

STAINLESS STEEL ADJUSTABLE BANDS (2)

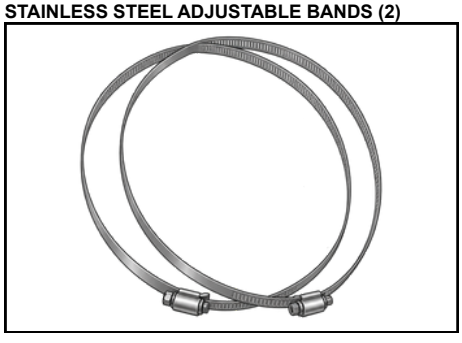

MOUNTING HARDWARE

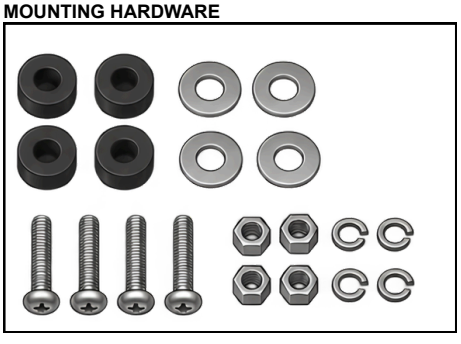

Pole size: Included bands fit 1.5″–8″ diameter poles.
Larger bands, sold separately, fit 4″–17.5″ diameter poles and use the same installation steps.

How To Use The External Mounting Points

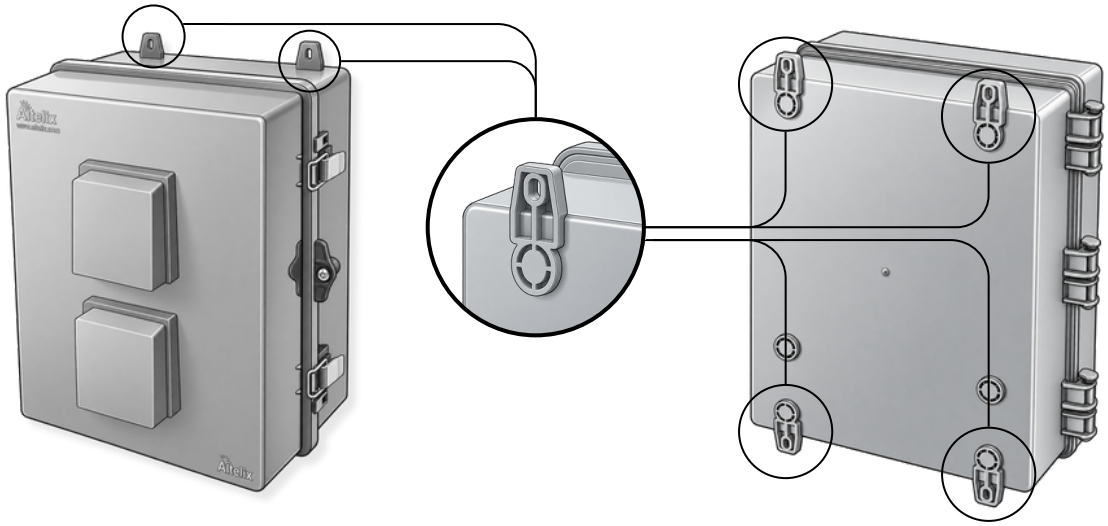

Step 1

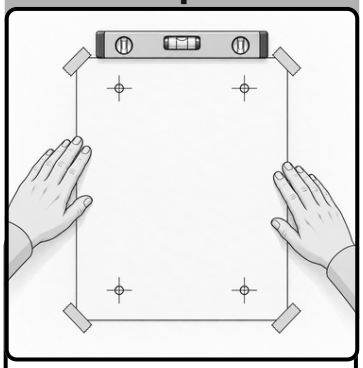

Position the mounting template on the wall, level it, and tape it in place.

Step 2

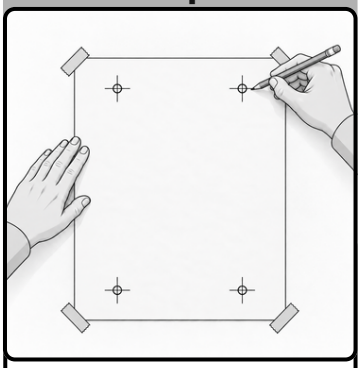

Mark all four hole centers with a pencil, then remove the template.

Step 3

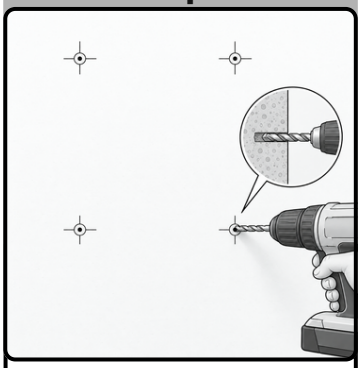

Drill the holes using the diameter and depth required for the selected anchors.

Step 4

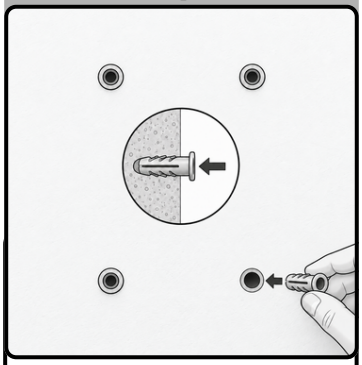

Install the wall anchors according to their instructions.

Step 5

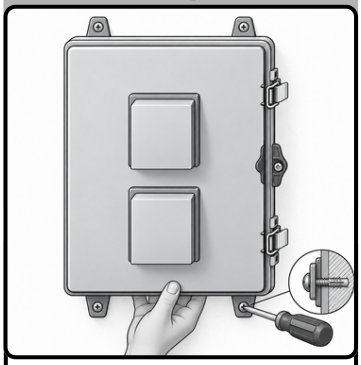

Align the enclosure's external mounting feet with the holes and start all four screws.

Step 6

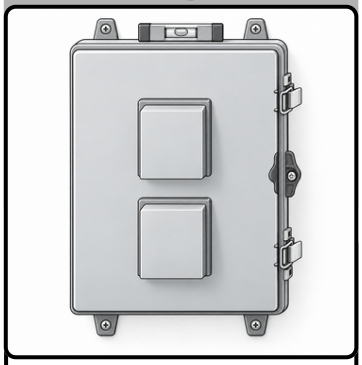

Check that the enclosure is level, tighten the screws without overtightening, and confirm it is secure.

How To Use The Pole Mount Kit Using The External Mounting Points

Pole Mount Kit

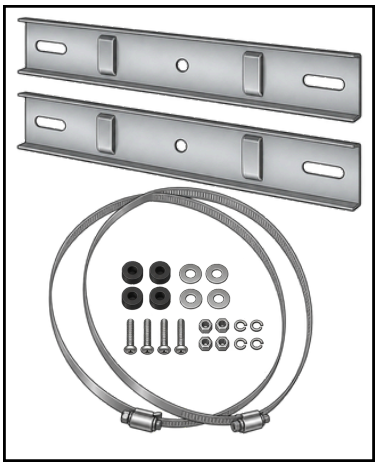

External Mounting Points

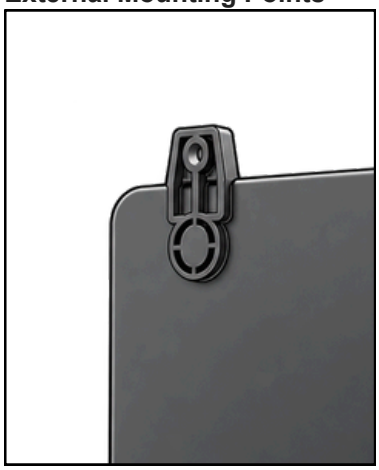

Installed Pole Mount Kit



Step 1

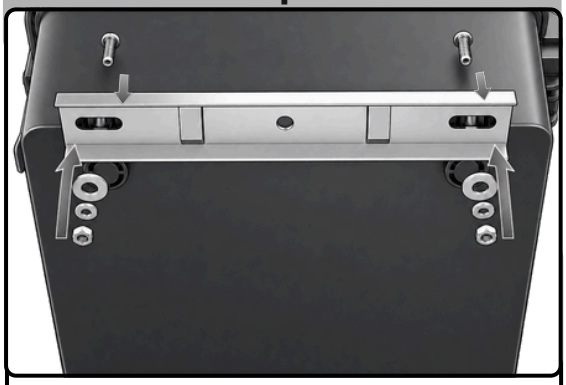

Align both plates with the external mounts and secure them using the bolts, flat washers, lock washers, and nuts. Tighten all four connections.

Step 2

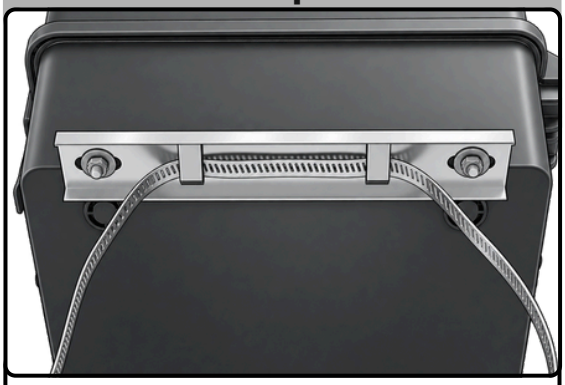

Insert the bands. Feed one stainless steel band at a time through the guides on each plate.

Step 3



Place the enclosure on the ground against the pole. Wrap both bands around it and close them loosely.

Step 4

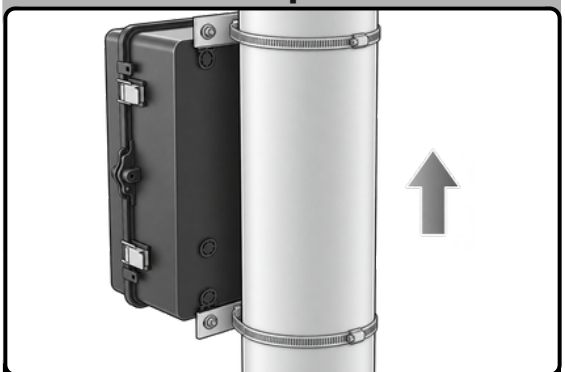

Support the enclosure, raise it to the desired height, and tighten both bands securely.

How To Install Multi-Port cable glands with plugs

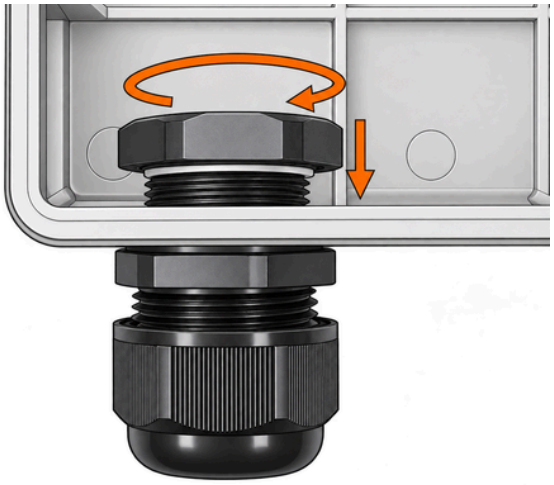



Step 1

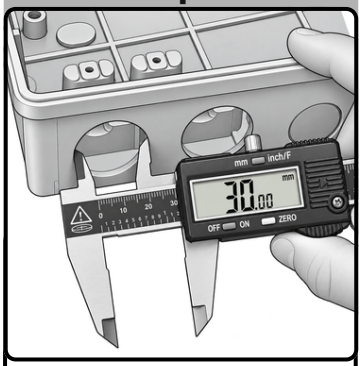

Measure the mounting hole and confirm it matches the gland's specifications.

Step 2



Measure each cable's diameter and confirm it fits the supported range.

Step 3



Insert the gland body through the hole and secure it with the locknut inside the box.

Step 4



Unscrew the compression cap and remove the rubber sealing insert.

Step 5



Remove plugs only from the ports needed. Feed cables through the cap and body, then fit the split seal around them.

Step 6

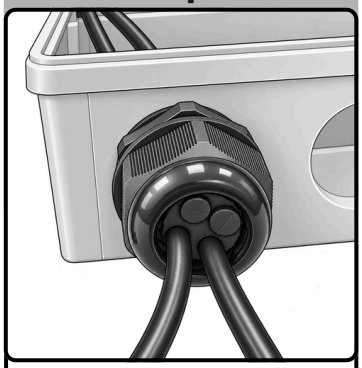

Seat the seal inside the gland and tighten the cap securely. Keep unused ports plugged.

How To Install the Marantz® AMP Model M1

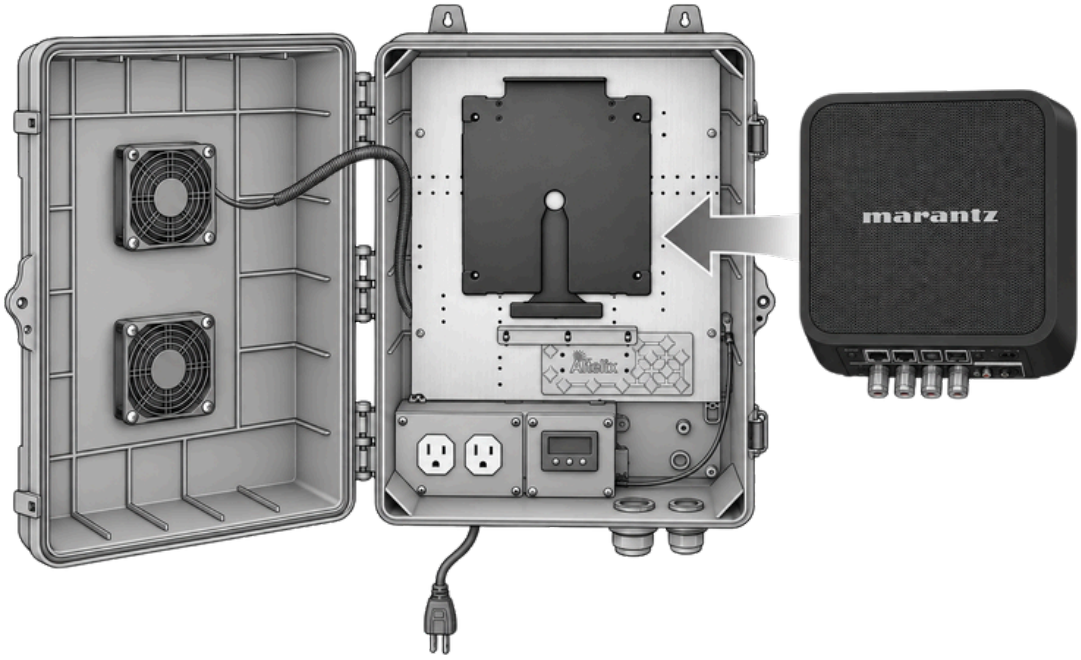

Step 1



Attach the locking cam to the bottom of the Marantz® Model M1 Amp.

Step 2

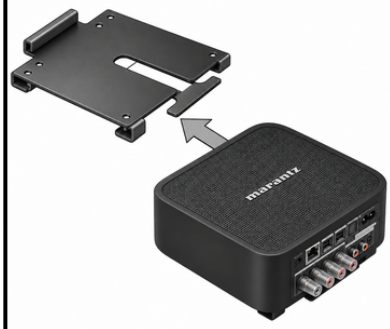

Slide the Marantz® Model M1 Amp into the mounting bracket until it locks into place.

Step 3



To remove the Amp, press the bracket's release tab and slide the Amp out.

Read the controller

Display in Normal Operation Mode:
The display shows two different temperatures.

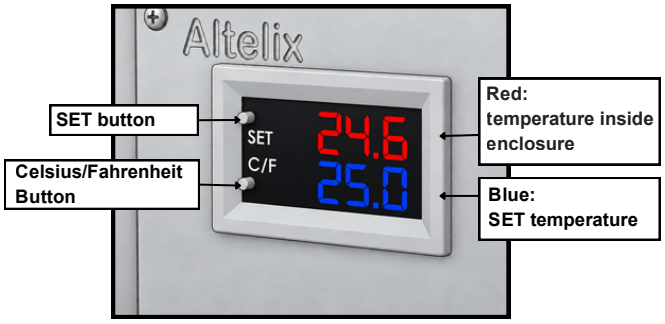

Display example: 24.6 is the measured temperature; 25.0 is SET.
The selected unit applies to both.
The numbers alone do not show whether the fan is running.

Display in Programming Mode:
The display shows program number and program value.

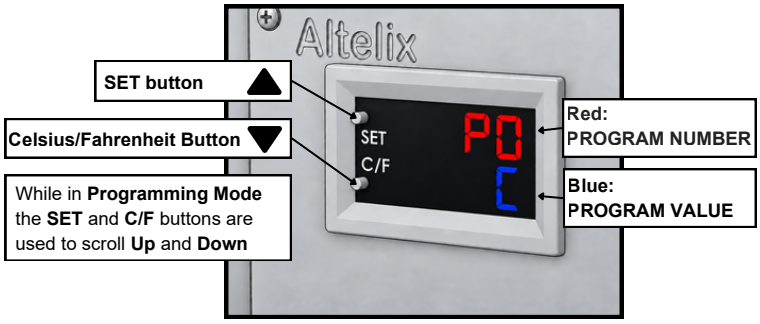

Display example: P0 is the program code for **C**ooling / **H**eating Mode.
C is the selected program value, meaning cooling; **H** means heating.
In programming mode, the **red** display shows the **program code** and the **blue** display shows its **value**, rather than temperatures.

What the buttons do in Normal Operation

Press **SET** once: adjust the **SET** temperature.
Hold **SET** for **5** seconds: open the programming menu.
Press C/F in normal operation: switch Celsius (**CS**) / Fahrenheit (**FH**).
note: By default when first turned on, the controller is in Celsius mode.

Set Controller for Celsius or Fahrenheit

While in operation mode, press the C/F Button to toggle between C° (Celsius) or F° (Fahrenheit).
Note: By default when first turned on, the controller is in Celsius mode

How to change between Cooling / Heating Modes

The controller can be set for Cooling or Heating modes.
Note: For proper operation the controller must be set to Cooling Mode (this is the default mode).

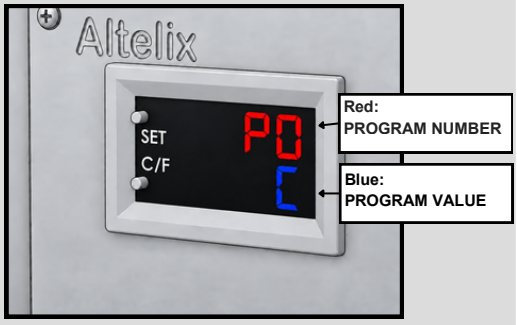

Step 1 - **Press** and **hold** the **SET** button for **5** seconds to enter into **programming mode**.

Step 2 - Using the **SET** or **C/F** buttons, scroll to program **P0** as shown.

Step 3 - Simultaneously press the **SET** and **C/F** buttons to confirm **P0**.
The display will then flash.

Step 4 - Using the **SET** or **C/F** buttons, change the Program Value to "**C**" as shown.

Step 5 - Simultaneously press the **SET** and **C/F** buttons to confirm.

Copyright (C) 2026 Altelix LLC. All rights reserved. Altelix and Think Inside the Box are Registered Trademarks of Altelix LLC.
Specifications are subject to change without notice. See www.altelix.com for most current information

How to Program the Fan On/Off Temperatures

Two settings control when the cooling fan runs:
SET temperature: the temperature at which the fan turns **OFF**.
Return Difference (**P1**): the temperature gap above **SET** at which the fan turns **ON**.
For example, with **SET** = **70°F** and **P1** = **5°F**, the fan turns **ON** when the enclosure reaches **75°F** and turns **OFF** after it cools to **70°F.**

First program the Return Difference Temperature

Step 1 - **Press** and **hold** the **SET** button for 5 seconds to enter into **programming mode**.

Step 2 - Using the **SET** or **C/F** buttons, scroll to program 1 (**P1**) as shown.

Step 3 - Simultaneously press the **SET** and **C/F** buttons to confirm **P1**. **The display will then flash**.

Step 4 - Using the **SET** or **C/F** buttons, change the temperature to the desired value.

Step 5 - Simultaneously press the **SET** and **C/F** buttons to confirm.

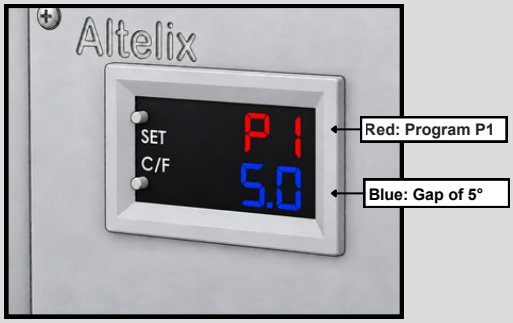

Now program the SET temperature

Step 6 - Press the **SET** button once. **The temperature display will flash.**

Step 7 - Using the **SET** or **C/F** buttons, change the temperature to the desired value. Wait a few seconds to confirm
(once the display **stops flashing**, the temperature is **confirmed**).

The two display examples would be how to set the controller so that that cooling fan turns on at 75°F and turns off at 70°F.

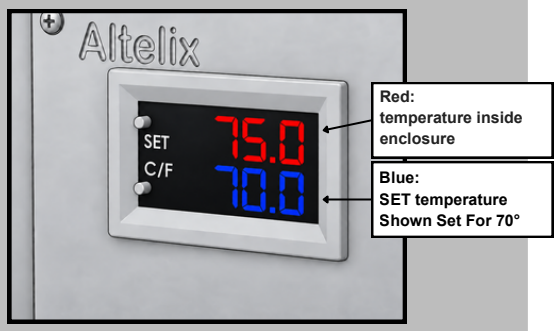

Warning: Setting the Return Difference Temperature to "0" may cause the fan to cycle on and off rapidly and degrade the fan lifespan. The factory default is "2.0"

Additional Programming Parameters

Code	Funtion	Range / Options	
P0	Heating / Cooling	Heating (H) / Cooling (C)	
P1	Return Difference	0.1 to 30	C
P2	SET Upper Limit	110	2.0
P3	SET Lower Limit	-50	110
P4	Temperature Correction	-15 to 15	-50
P5	Delay Start	0 to 10	0
P6	High-Temperature Alarm	-50 to 110	0
P7	Temperature Units	Celsius (CS) / Fahrenheit (FH)	CS
P8	Factory Reset	ON / OFF	OFF

Source defaults, not verified shipment settings. Confirm the installed controller matches these instructions. P5 delay units and advanced range units are unspecified. Factory reset also uses an extended SET + C/F hold; the source gives no duration.

Copyright (C) 2026 Altelix LLC. All rights reserved. Altelix and Think Inside the Box are Registered Trademarks of Altelix LLC.
Specifications are subject to change without notice. See www.altelix.com for most current information